Terminal	
No.	Pin Name
1	C1N
2	C1P
3	VOUT
4	VDD
5	VSS
6	SDA
7	SCK
8	RES

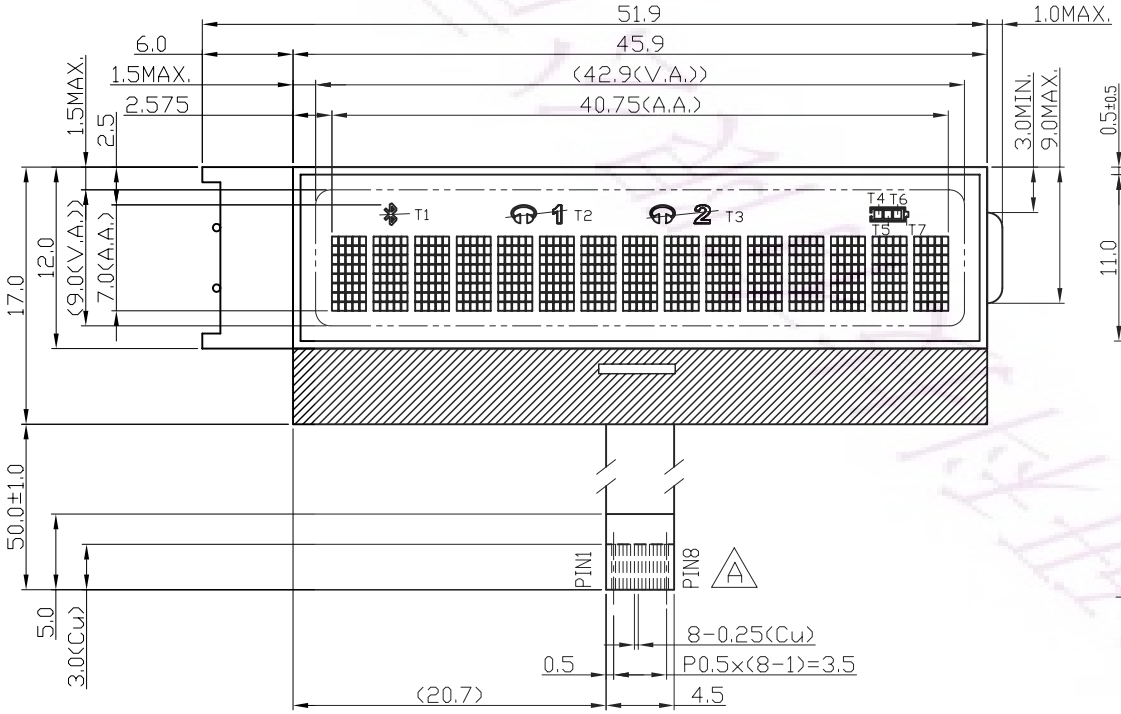

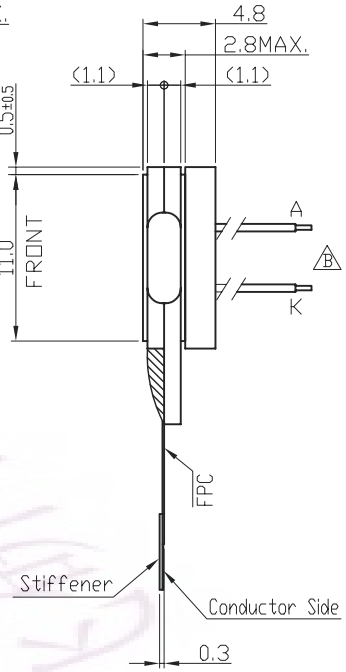

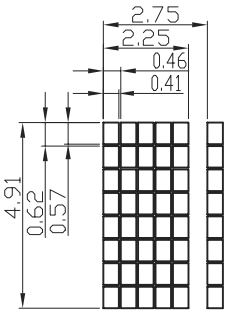

Pixels Details
Scale=5/1

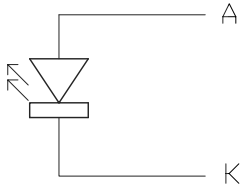

Backlight Circuit
Scale=free

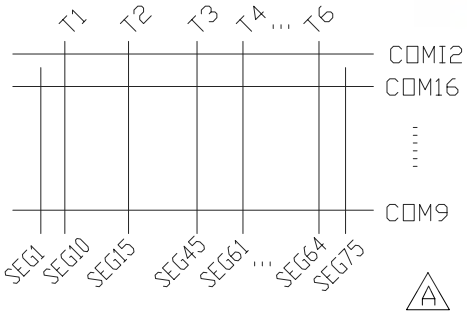

Panel Wiring Details
Scale=free

Note :
*1. LCD Display Type : FSTN, Positive, Transmissive
*2. Viewing Direction : 6H
*3. Duty : 1/16; Bias : 1/5 B
*4. Operating Voltage : 3.3V
*5. Backlight Color : White(If = 15mA TYP.)
*6. Operating Temperature : 0°C~50°C
*7. Storage Temperature : -10°C~60°C
*8. Cortrol/Drive IC : ST7032

Dwg Title	COG1501A		
Dwg No.	060253(Rev.02)	Date	2008-08-27
Scale 3/2	Unit mm	Tol. ±0.5	
Drawn JACK	Checked	Approved	